MAPX	MODIFICATION	DATE

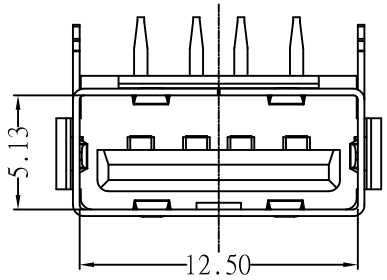

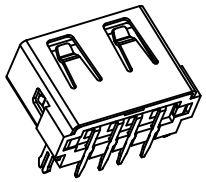

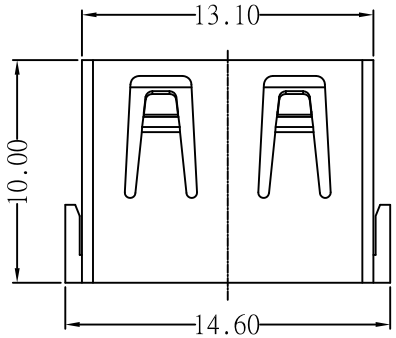

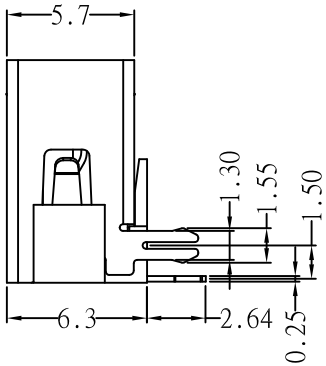

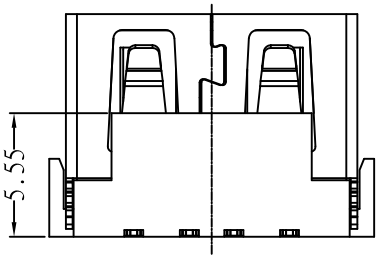

Specification:

1.Electrical Characteristics:

Dielectric Withstanding Voltage: AC 500V/1MINUTE.
Insulation Resistance: 1000 MΩ\Min.
Contact Resistance: 30 mΩ\ Max.

2.Mechanical Characteristics:

INSERTION FORCE: 30N(3.06Kgf) MAX
EXTRACTION FORCE: 10~30N(1.02~3.06Kgf)
Durability:1500cycles.EXTRACTION FORCE:10~30N(1.02~3.06Kgf)

3. Material:

Terminal: C5191/C2680R-EH T=0.25
Plating: Gold 0.76 um Min plating over 1.27 um Min Nickel underplate, 2.54 um Min Sn selective plating on solder tail;
Shell: Bronze, SPCC,H =0.30mm
Plating: Nickel underplate 2.54 um Min;
Housing: PBT PA9T LCP Black White

4.Environmental:

Operating Temperature: 0˚C to +85˚C.

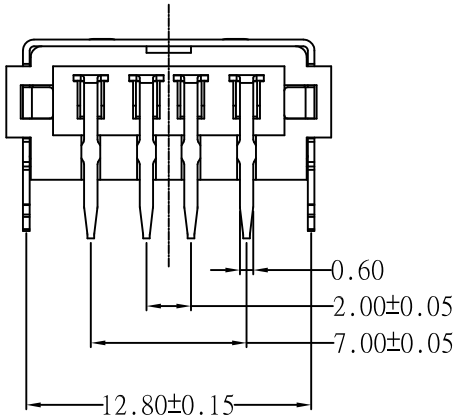

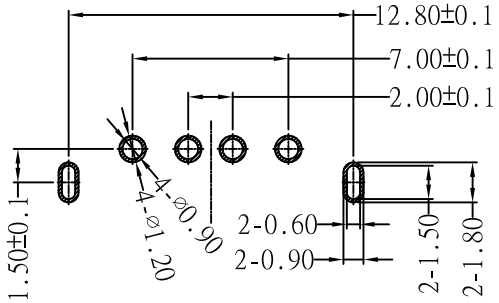

RECOMMENDED P.C.B LAYOUT

产品图
PRODUCT CHART DWG

公差一览表
TOLERANCE UNLESS OTHERMSE

X.	±0.30	X.	±5.°
.X	±0.25	.X	±2.°
.XX	±0.15	.XX	±1.°
.XXX	±0.10	.XXX	±0.5°

易芯精密科技(浙江)有限公司
Easychips Precision Technology (Zhejiang) Co.,Ltd.

单位 UNITS	MM	制图 DRAWING	YANG	制图料号 PRODUCT PART NO.	A908-EC261A1011D10100
比例 SCALE	1:1	审核 CHKD		产品名称 PRODUCT NO.	AF10.0A款后两脚无边铁壳PBT白胶6.3DIP
日期 DATE	2019.11.23	核准 APPD		角法 VIEW	版本 VER A0