目錄 MAPX	设变内容 MODIFICATION	日期 DATE

Note:
1.Material:
1.1 Housing: High temperature thermoplastic with g.f,UL94v-0
1.2 Contact: copper alloy,t=0.15mm
1.3 Shell: copper alloy,t=0.25mm
2.Specification:
2.1 Current rating:1,5PIN 1.8A Max/2,3,4PIN 1A Max.
2.2 Dielectric withstanding voltage: 100 V(ac) for 1 min.
2.3 Contact resistance: 30 mΩ Max.
2.4 Insulation resistance: 100 MΩ Min.
2.5 Total mating force: 3.57 Kgf Max.
2.6 Total unmating force: 1.0 Kgf Min.
2.7 Temperature range: -30°C~80°C

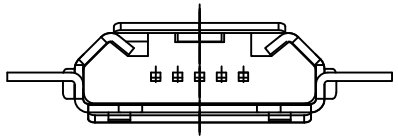

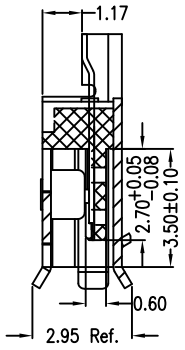

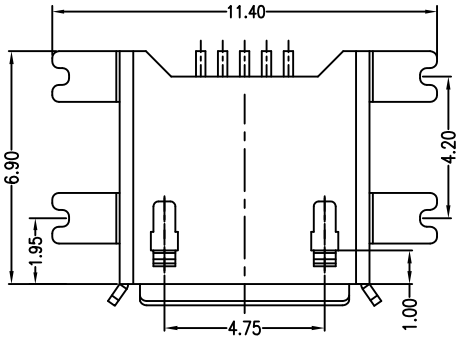

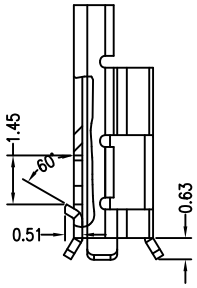

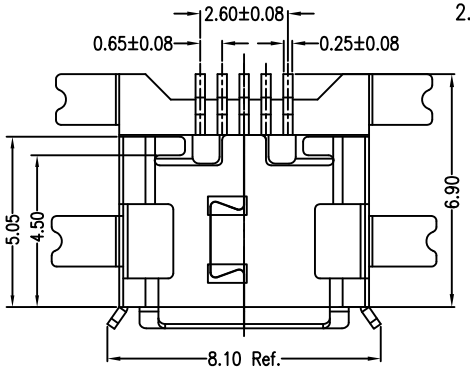

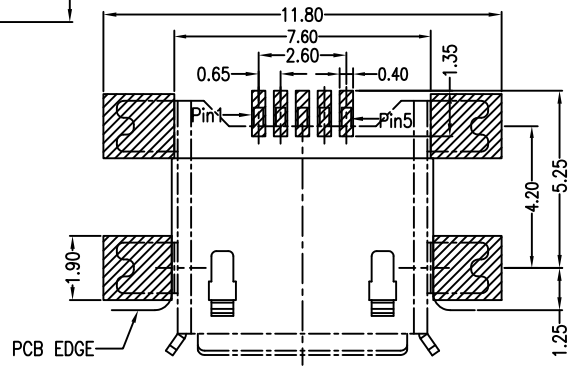

RECOMMANDED PCB LAYOUT
PCB图仅供参考

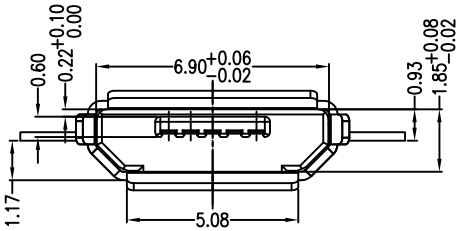

产品图 PRODUCT CHART DWG				易芯精密科技(浙江)有限公司 Easychips Precision Technology (Zhejiang) Co.,Ltd.					
公差一览表 TOLERANCE UNLESS OTHERWISE				单位 UNITS	MM	制图 DRAWING		产品料号 PRODUCT PART NO.	B920-ECF52A2021S10101
X.	±0.15	X°.	±5°	比例 SCALE	1:1	审核 CHKD		产品名称 PRODUCT NO.	MICRO 5S-B 沉板式1.17全金四脚全贴有边LCP黑胶
.X	±0.10	.X°	±2°	日期 DATE	2013/1/20	核准 APPD		角法 VIEW	版本 VER A0
.XX	±0.05	.XX°	±1°						
.XXX	±0.03	.XXX°	±0.5°						